Compact fault annunciator ESS 8 and ESS 12

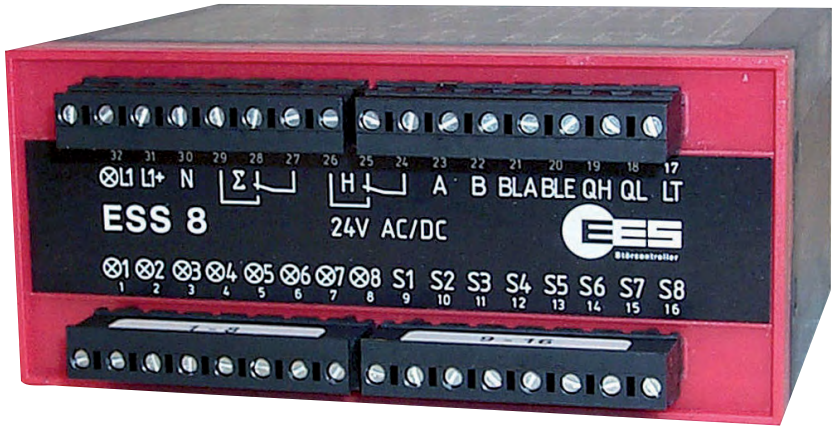

Compact fault annunciator for 8 or 12 inputs

- EES 8 modular expandable up to 80 inputs
- Triggering of signalling lights or tableaux
- Supply voltage and signalling voltage equipotential
- Phase arbitrary drive of the reporting inputs
- Horn and lamp reports with single acknowledgement
- No activation of horn and collective reports by lamp test
- Terminals pluggable

Datasheet

05.03.2014

SM-ESS-DB-UK-002

Functional description

The fault annunciator devices **ESS 8** and **ESS 12** are compact and reasonably priced new value reporting devices providing collective report formation and horn triggering as well as potential-free output contacts for driving signalling tableaux. By external attachable push buttons both the reports themselves and the horn can be acknowledged and also a lamp test can be executed.
The contacts for horn and collective reports are designed as potential-free NO contacts. If an alarm lines up longer than the response delay, the corresponding indicator lights up, horn and collective report are activated as well as the alarm is being stored. All incoming alarms inputs are shown in flashing light. Alarms already cleared but still not acknowledged are signalled by flashing in opposition on the ESS 12. The horn acknowledgment ends the signal of the horn attached externally. When the acknowledgment push button for the lamps is pressed when the alarm is still lining up, the flashing light indication changes into steady light. Otherwise the indicator light goes out. The collective report is deactivated only after acknowledgment and remedying of all individual alarms.

With the ESS 8 the number of processed inputs can be increased by switching on at most 9 expansion devices ESS 8 E up to 80 reports. The expansion devices don't have horn and collecting report relays of their own. The flashing synchronisation and control lines have to be fed through by the basic device about all expansion devices. All devices must be put on the same reference potential „N" (see terminal assignment).

Technical data for ESS 8

Type description	**ESS 8/24**	**ESS 8-E/24**	**ESS 8/230**	**ESS 8-E/230**
Article-Number	**54ESS08001**	**54ESS08E01**	**54ESS0800U**	**54ESS08E0U**
Module type	Basic device	Expansion	Basic device	Expansion
Reports per module	8			
Alarm sequence *	New-value with 1-frequency-flashlight and single acknowledgement			
Horn triggering *	Retriggerable without reactivation			
Collective report *	Static, parallel to output			
Supply				
Nominal voltage	24 V DC / AC		230 V AC	
Voltage range	21 ... 30 V		195 ... 253 V AC	
Power consumption nominal / maximal	1 W / ≤ 5 W		4 W / ≤ 9 W	
Inputs **				
Voltage range	0 ... 80 V AC / DC		0 ... 260 V AC	
Maximum input current	≤ 2 mA @ 24 V		≤ 1 mA @ 230 V 50 Hz	
Signal treshhold „ON" / „OFF"	≥ 10 V / ≤ 4 V		≥ 160 V / ≤ 80 V	
Response delay	≤ 100 ms		≤ 100 ms	
Relay outputs	0 ... 250 V AC / DC			
Voltage range	2 A @ 0 ... 250 V AC; 2 A @ 24 V DC; 0,3 A @ 24 ... 110 V DC;			
Maximum load current	0,15 A @ 110 ... 220 V DC			
Flashing frequency	1 Hz			
Ambient conditions				
Operating temperature	-20°C ... +60°C non condensing			
Storage temperature	-20°C ... +70°C			
Maximum relative humidity	75% (average mean)			
Mechanical data				
Protection class	IP 40 / VBG 4			
Terminals	pluggable screw terminals; wire cross section 1,5 mm²			
Dimensions (H x W x D) [mm]	70 x 156 x 138			
Mounting	on C-DIN rail TS35 acc. to EN60715:2001-09			
Weight	approx. 800 g			

* A detailed description of the alarm sequences can be found in the document „SM-MA-ZI-UK".
** Other voltages on request

Technical data of the ESS 12

Type description	**ESS 12/24**	**ESS 12/230**
Article number	**ESS12 GB-24**	**ESS12 GB-230**
Reports per module	12	
Alarm sequence *	New-value with 1-frequency-flashlight and single acknowledgement	
Horn triggering *	Retriggerable without reactivation	
Collective report *	Static, parallel to output	
Supply		
Nominal voltage	24 V DC / AC	230 V AC
Voltage range	21 ... 30 V	195 ... 253 V AC
Power consumption		
nominal / maximal	1 W / ≤ 7 W	3 W / ≤ 13 W
Inputs **		
Voltage range	0 ... 60 V AC / DC	0 ... 260 V AC
Maximum input current	≤ 2 mA @ 24 V	≤ 1,5 mA @ 230 V 50 Hz
Signal treshhold „ON" / „OFF"	≥ 17 V / ≤ 11 V	≥ 160 V / ≤ 80 V
Response delay	≤ 100 ms	≤ 100 ms
Relay outputs		
Voltage range	0 ... 250 V AC / DC	
Maximum load current	2 A @ 0 ... 250 V AC; 2 A @ 24 V DC; 0,3 A @ 24 ... 110 V DC; 0,15 A @ 110 ... 220 V DC	
Flashing frequency	1 Hz	
Ambient conditions		
Operating temperature	-20°C ... +60°C non condensing	
Storage temperature	-20°C ... +70°C	
Maximum relative humidity	75% (average mean)	
Mechanical data		
Protection class	IP 40 / VBG 4	
Terminals	pluggable screw terminals; wire cross section 1,5 mm²	
Dimensions (H x W x D) [mm]	70 x 156 x 138	
Mounting	on C-DIN rail TS35 acc. to EN60715:2001-09	
Weight	approx. 900 g	

* A detailed description of the alarm sequences can be found in the document „SM-MA-ZI-UK".

** Other voltages on request

If not different noted, the information for alternating voltages are referring to a sinusoidal alternating voltage with a frequency of 50/60 Hz.

We would be happy providing you custom-built variants, e.g. NC principle of the inputs or other alarm sequences on request.

Terminal assignments

ESS 8 / ESS 8-E

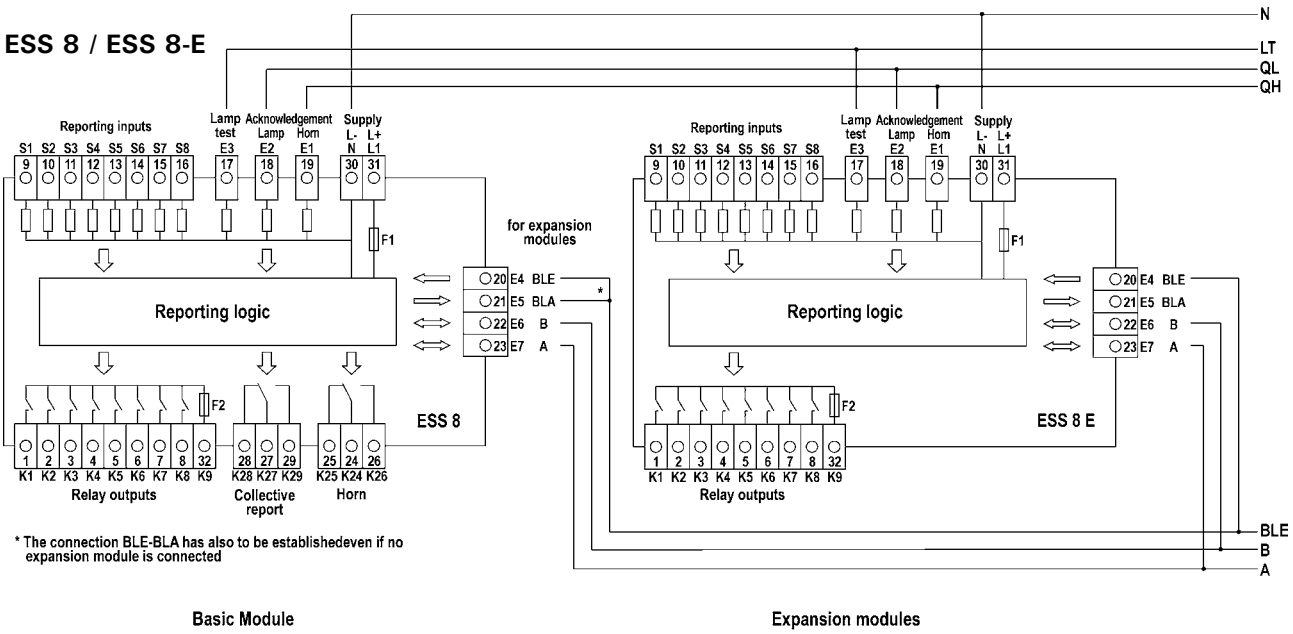

Basic Module

Expansion modules

ESS 12

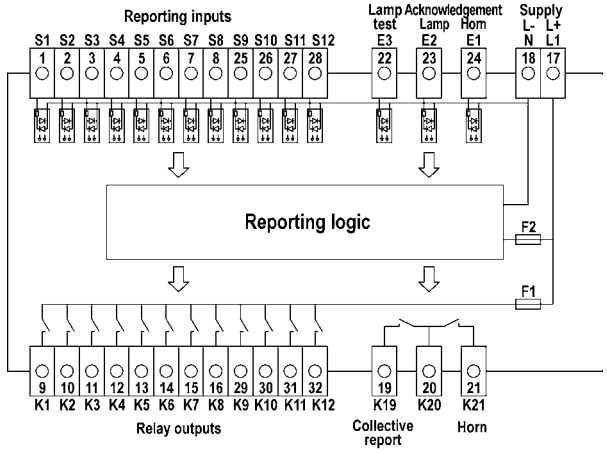

Dimensional drawing ESS 8, ESS 8-E and ESS 12

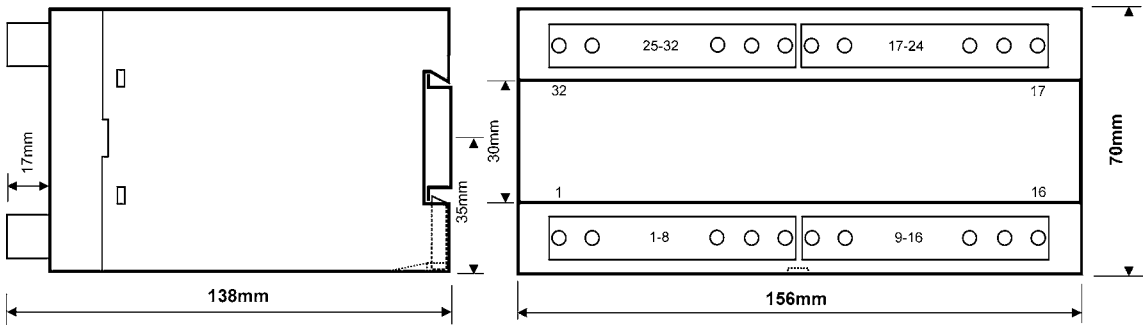

Dimension in mm

Subject to technical changes

Contact

Elektra Elektronik GmbH & Co Störcontroller KG | Hummelbühl 7-9 | 71522 Backnang | Germany
Tel. +49 (0) 7191.182-0 | Fax. +49 (0) 7191.182-200 | info@ees-online.de | www.ees-online.de